MODEL CODE

IAQ3 □□□□ - □□□ - □ - □

Primary Transducer Pressure Range
- 1 = 0.1" WC (973 FPM)
- 2 = 0.4" WC (1945 FPM)

*See note 2

Primary Transducer Probe Type
- 0 = No Accutrol Probes
- 1 = Standard Accutrol Probe

Primary Transducer Probe Quantity
- 0 = 0 Probes
- 1 = 1 Probe
- 2 = 2 Probes
- 3 = 3 Probes
- 4 = 4 Probes
- 5 = 5 Probes
- 6 = 6 Probes
- 7 = 7 Probes
- 8 = 8 Probes

*For probe quantities greater than 8 see note 1

Cable Length To I/O Module
- 1 = 25' Cable
- 2 = 50' Cable

Options
- W = Wireless Bluetooth

Communications
- 0 = No Comm
- 1 = MS/TP BACNET

Secondary Transducer Probe Quantity
- 0 = 0 Probes
- 1 = 1 Probe
- 2 = 2 Probes
- 3 = 3 Probes
- 4 = 4 Probes
- 5 = 5 Probes
- 6 = 6 Probes
- 7 = 7 Probes
- 8 = 8 Probes

*For probe quantities greater than 8 see note 1

Secondary Transducer Probe Type
- 0 = No Accutrol Probes
- 1 = Standard Accutrol Probe

Secondary Transducer Pressure Range
- 0 = No Secondary Transducer
- 1 = 0.1" WC (973 FPM)
- 2 = 0.4" WC (1945 FPM)

*See note 2

Notes:
1. For additional probe kits, consult the factory.
2. All Velocities for transducer range shown at standard conditions for standard Accutrol probe.

SYSTEM DIAGRAM

(IAQ31131-111-0 Shown)

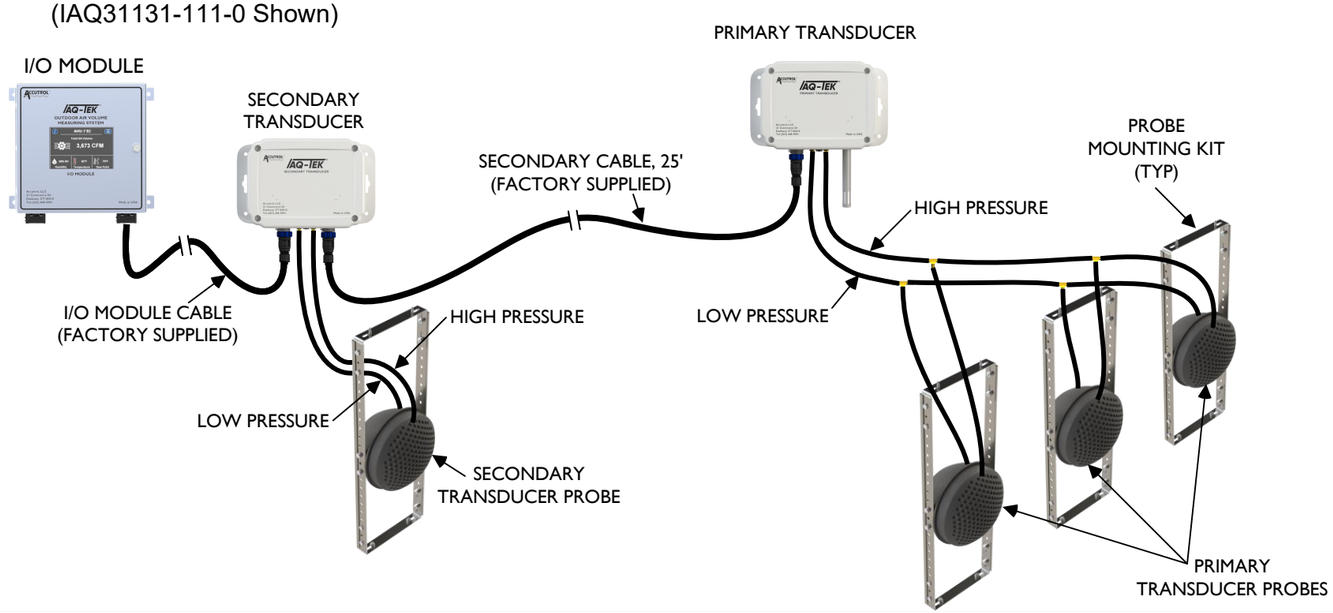

SPECIFICATIONS

SYSTEM		
System Input Power	24VAC +/-20%, 22VA, 50-60Hz (Class 2 Power Source) or 24 VDC +/- 20%, 10W	
Vel. Range (Standard Accutrol Probe)	0-973 fpm (0.1" wc FS)	0-1945 fpm (0.4" wc FS)
Accuracy	+/- 3% of Reading above 75 fpm	
Compliance	RoHS, CE	
TRANSDUCER		
Pressure Measurement		
Full Scale Range	0.1" wc (25 Pa)	0.4" wc (100 Pa)
Resolution	0.00000335" wc (0.00083 Pa)	0.00001338" wc (0.00333 Pa)
Zero Offset (Max)	+/- 0.0004" wc (0.0996 Pa)	
Span Accuracy	+/- 1.5% of reading	
Static Error Band	+/- 3% of reading Note: Includes linearity, hysteresis, & repeatability	
Long Term Stability	+/- 0.00008" wc (+/- 0.02 Pa) per year max	
Temperature Measurement	Range: -35 to 158 deg F (-37 to 70 deg C)	
	Accuracy: +/- 1.0 deg F (+/- 0.56 deg C)	
	Response Time: 10 sec	
	Long Term Stability: < 0.054 deg F/year (< 0.03 deg C/year)	
Relative Humidity Measurement	Range: 0 to 100%	
	Accuracy: ±2% (10...90% RH non-condensing)	
	Response Time: 10 sec	
	Long Term Stability: < 0.25% RH/year	
Barometric Pressure Measurement	Range: 7.7 to 32.2 "hg	
	Accuracy: +/- .007 "hg (for reference only)	
Environmental	Operating Temp Range: -35 to 120 deg F (-37 to 49 deg C)	
	Storage Temp Range: -40 to 150 deg F (-40 to 66 deg C)	
	Humidity: 0 to 95% non-condensing	
Enclosure	IP65; NEMA 4X	
Cable Assembly	Plenum-rated communications cable assembly for harsh environments	
	Operating Temp Range: -40 to 176 deg F (-40 to 80 deg C)	
	IP68 connection to transducer	
Materials of Construction	Enclosure: Polycarbonate Plastic, Silicone Gasket, Stainless Steel Hardware	
	Temp/RH Probe: AISI 316SS with sintered polyethylene 100-micron filter	
	Cable Assembly: PL-PVC plenum rated cable with Polyamide UL94V-0 connector	
I/O MODULE (INTEGRAL DISPLAY)		
System Input Power	24VAC +/-20%, 22VA, 50-60Hz (Class 2 Power Source) or 24 VDC +/- 20%, 10W	
Configuration Port	USB 2.0, Isolated, Type C Conn., connect PC with Insight	
Relay Outputs	2 Independent SPST Relay Contacts (Software Configurable)	
	Contact Rating: 2A @ 30VDC, 0.5A @ 60VDC, 0.3A @ 125VAC	
Analog Outputs	2 Analog Outputs (Software Configurable)	
	0-5v, 1-5v, 0-10v, 2-10v, 0-20mA or 4-20mA	
	capable of driving 1 K-ohm load	
Transducer Connection	5-pos. pluggable screw terminal (use factory cable only)	
Touchscreen Display	Type: 3.5" LCD-TFT Resistive touch display with LED backlight	
	Color: RGB 65K colors	
	Active Area: 2.91" x 1.91" (73.91mm x 48.51mm)	
	Resolution: 480 x 320 pixel	
BACnet MS/TP (Optional)	EIA 485 2-wire, BACnet MS/TP, Galvanically Isolated	
	Transceiver Impedance: 1/8 unit load	
	Full Master Node State Machine	
	Data Rates 9600, 19200, 38400, 76800 and 115200	
	MAC address is software configurable	
BACnet IP (Optional)	Future	
Status Indicators	LED Indicators for Power, Pressure Sensor, Display, BACnet, & Bluetooth	
I/O Terminal Blocks	Removable Vertical Plugs, Wire Size Range 12-30 AWG	
Bluetooth (Optional)	Bluetooth Version 4.2 or later, connect to PC with IAQ-TEK Insight	
Environmental	Operating Temp Range: -4 to 120 deg F (-20 to 49 deg C)	
	Storage Temp Range: -22 to 176 deg F (-30 to 80 deg C)	
	Humidity: 10 to 90% non-condensing	
PROBE KIT		
Probe	Kydex ® T, Fire Rating: UL 94 V-0	
Pneumatic Tubing	Polyethylene Plastic, Plenum Rated, UL 94 V-2	
Tubing Connections	¼" Barb Fittings, Brass	
Mounting Brackets	304 Stainless Steel	
Hardware	18-8 Stainless Steel	

ACCUTROL LLC
21 Commerce Dr
Danbury, CT 06810
Tel: 203-445-9991
accutrollc.com

Accutrol Representative:

SUBMITTAL DRAWING

IAQ-TEK®

THIS DOCUMENT IS SUBJECT TO CHANGE WITHOUT NOTICE.

THIS DOCUMENT OR THE CONTENTS THEREOF SHALL NOT BE MODIFIED WITHOUT PRIOR WRITTEN PERMISSION BY ACCUTROL LLC.

DWG. NO:	IAQ-TEK SUBMITTAL		
REVISION:	F	ECN:	3217
REV. DATE:	08-28-26	SHEET:	1 OF 5

DIMENSIONS

I/O Module

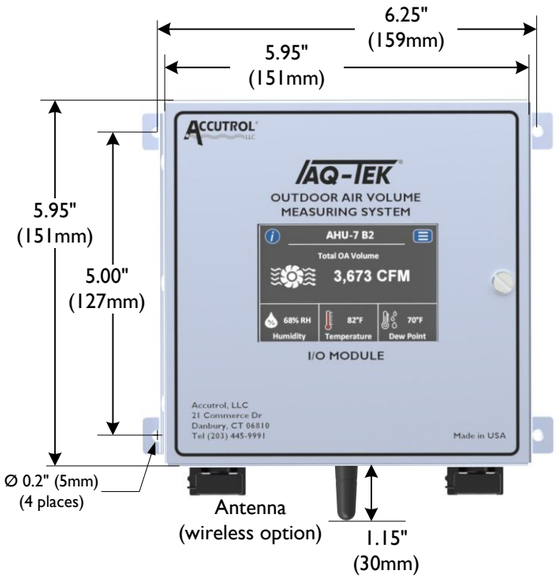

Primary Transducer

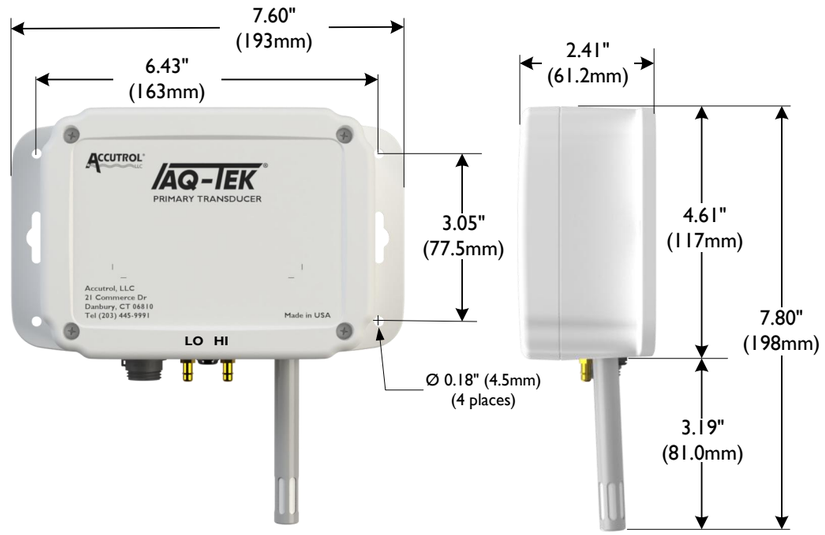

Secondary Transducer

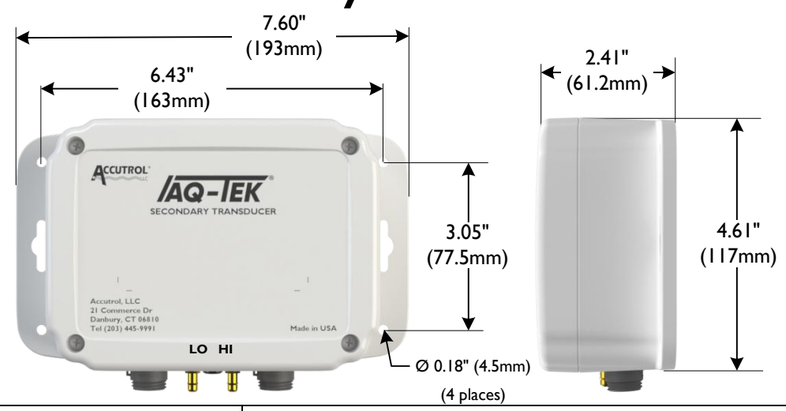

Standard Accutrol Probe

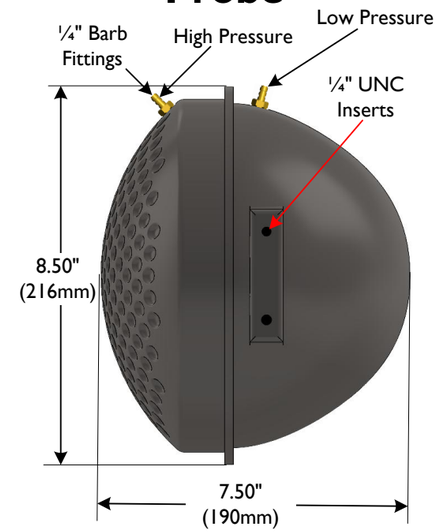

Probe Kit

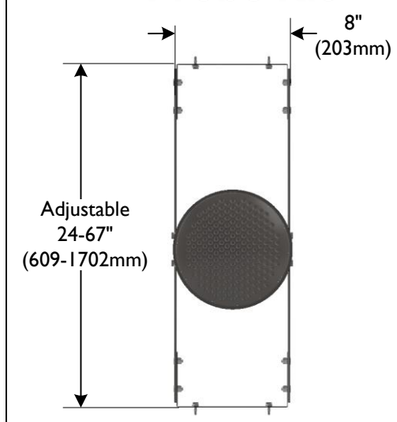

I/O Module Enclosure for Wet Locations

For wet applications the I/O Module must be installed inside of a watertight enclosure. Accutrol has selected a suitably sized enclosure for the I/O Module that can be purchased from Accutrol or directly from the manufacturer using the information provided below.

Item	Accutrol PN	Polycase PN
Watertight Enclosure	14-0069	ZH-100804-40
Cable Glands	By Others	CG-1x or CG-3x (x=size)
Vent Plug[1]	By Others	UA-005 or UA-006

Notes:
1. The vent plug is required to prevent pressure buildup without compromising the liquid-tight seal.
2. It's the responsibility of the "installing contractor" to drill properly sized holes in the enclosure, provide appropriately sized cable glands and vent plug to ensure enclosure is liquid tight.

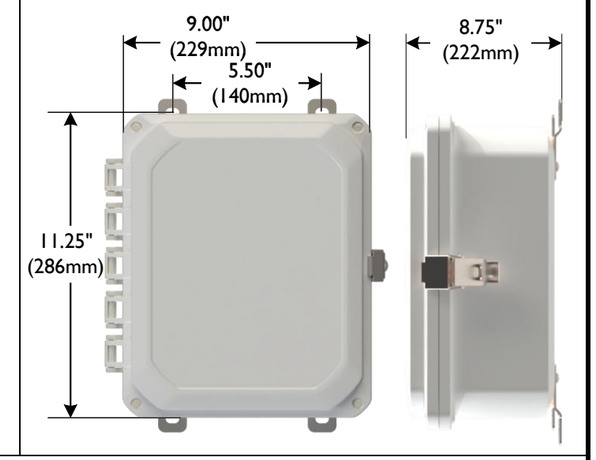

Materials

All Materials are RoHS Compliant
I/O Module Enclosure: 16 Gauge Aluminum Alloy 5052-H32
Transducer Enclosure: Polycarbonate. UL94-5VA.
Cable Assembly: PL-PVC Plenum-rated shielded cable with Polyamide UL94 V0 Connector
Probe: Kydex® T, Brass Fittings, UL94 V-0
NEMA 4X Enclosure (Optional): Polycarbonate. UL94-5VA.

Cables

Cable to I/O Module

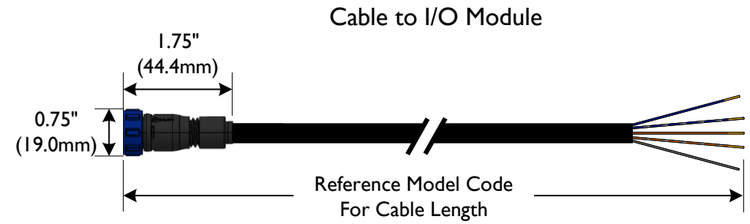

Secondary Transducer Cable

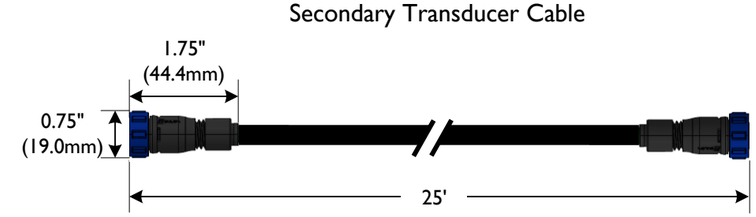

ACCUTROL LLC
21 Commerce Dr
Danbury, CT 06810
Tel: 203-445-9991
accutrolllc.com

Accutrol Representative:

SUBMITTAL DRAWING

IAQ-TEK®

THIS DOCUMENT IS SUBJECT TO CHANGE WITHOUT NOTICE.
THIS DOCUMENT OR THE CONTENTS THEREOF SHALL NOT BE MODIFIED WITHOUT PRIOR WRITTEN PERMISSION BY ACCUTROL LLC.

DWG. NO:	IAQ-TEK SUBMITTAL		
REVISION:	F	ECN:	3217
REV. DATE:	8-28-26	SHEET:	2 OF 5

Probe Installation

Kit Contents: (Quantity Per Probe)

1) Mounting Brackets
(6 Pcs)

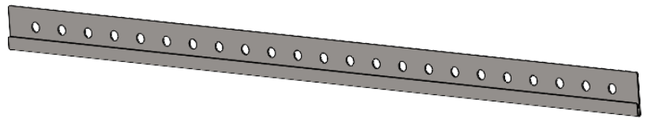

2) End Bracket
(2 Pcs)

3) Diagonal Brace
(2 Pcs)

4) Sheet Metal Screw
(4 Pcs)

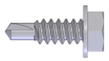

5) Bolts
(28 Pcs)

6) Probe
(1 Pc)

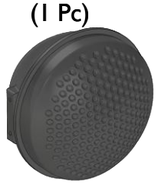

7) Lock Nut
(24 Pcs)

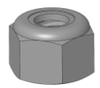

8) Lock Washer
(8 Pcs)

9) Pneumatic Tubing
(10 Feet)

10) "T" Fitting (2 Pcs)
(2+ Probes Only)

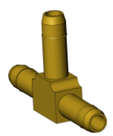

Mounting Surface A

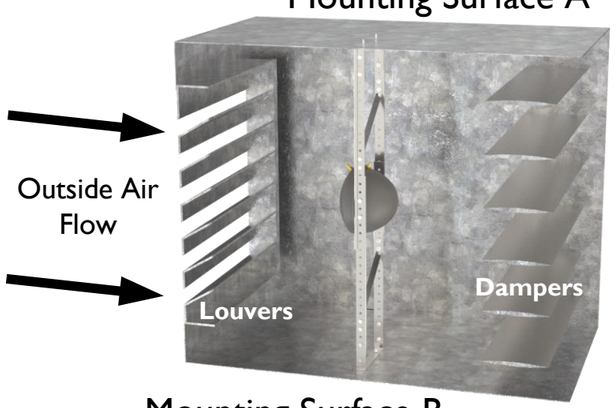

Mounting Surface B

1. Attach End bracket to "Mounting Surface A" using (2) lock washers and (2) sheet metal screws provided. Ensure the back of the Probe is at least six inches from the fully open dampers.

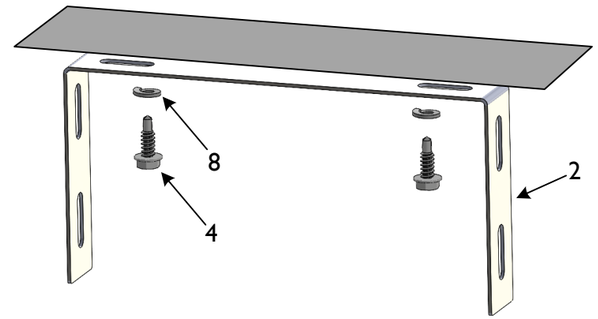

2. Attach the (2) mounting brackets to the upper end bracket using (4) ¼-20x ½ Bolts and (4) lock nuts provided.

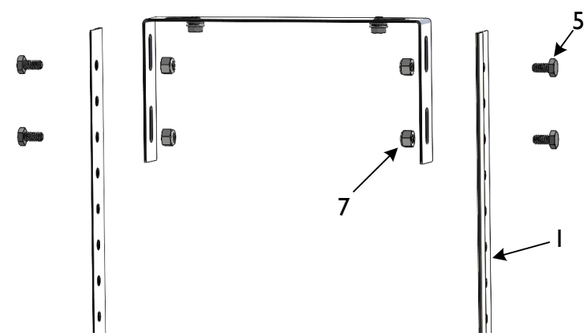

3. If mounting brackets do not reach the lower mounting surface, slide the (2) mounting brackets onto the upper mounting brackets as shown and extend to the lower mounting surface.

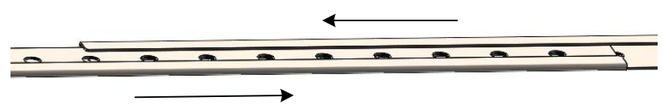

4. Repeat steps 1 and 2 to attach remaining "End Bracket" to the "Mounting Surface B" and (2) "Mounting Brackets".

5. Locate the Probe in center of the damper and secure to the mounting brackets using (4) ¼-20x ½ Bolts and (4) lock washers provided. Ensure the side of the probe with the dimples is pointing towards the oncoming outdoor air.

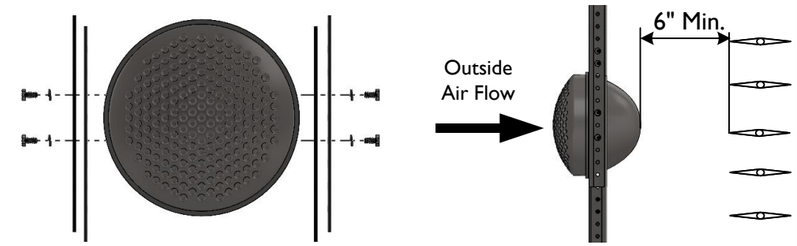

Mounting Surface A

6. For installations where the Height of the mounting bracket is greater than 40" the "Diagonal Brace" is needed to stiffen fixture. Mount using Bolts and lock nuts provided.

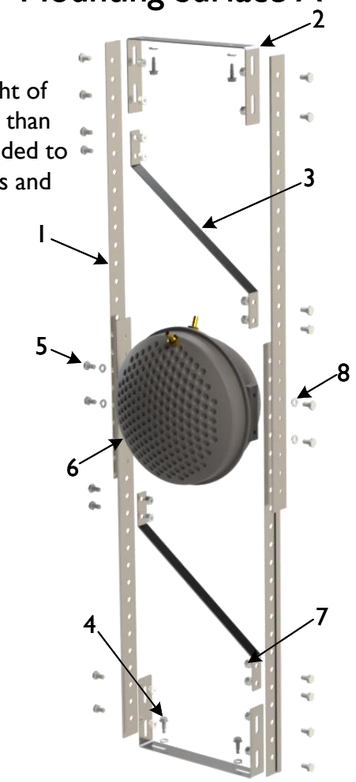

Mounting Surface B

ACCUTROL LLC
21 Commerce Dr
Danbury, CT 06810
Tel: 203-445-9991
accutrolllc.com

Accutrol Representative:

SUBMITTAL DRAWING

IAQ-TEK®

THIS DOCUMENT IS SUBJECT TO CHANGE WITHOUT NOTICE.
THIS DOCUMENT OR THE CONTENTS THEREOF SHALL NOT BE MODIFIED WITHOUT PRIOR WRITTEN PERMISSION BY ACCUTROL LLC.

DWG. NO:	IAQ-TEK SUBMITTAL		
REVISION:	F	ECN:	3217
REV. DATE:	8-28-26	SHEET:	3 OF 5

TRANSDUCER AND I/O MODULE INSTALLATION

Transducer Enclosure

The transducer is designed to be mounted in the air intake plenum, the transducer must be mounted higher than the probe(s) and the tubing to prevent condensation from blocking the pressure signal. No loops are permitted when routing tubing from the transducer to the probe.

1. Choose a location in intake plenum where transducer enclosure can be installed above probes and tubing.
2. When installed all connections are to point towards the ground.
3. Secure transducer to mounting surface using either (4) #8 or #10 screws (Provided by others).

Connections pointing towards ground.

I/O Module

The I/O Module enclosure includes 4 flanges with 0.2" dia holes provided for securing the I/O Module to a wall or panel plate. The I/O Module is intended to be installed in an area accessible and visible to access the touchscreen. This enclosure should be installed in a location protected from the environment unless waterproof enclosure is purchased.

Secure I/O Module to mounting surface using either (4) #8 or #10 screws (Provided by others).

For sheetrock installation, use the appropriate wall anchors (Provided by others).

⚠ ***Warning:*** *Do not install in direct sunlight.*

Multiple Probe Installation

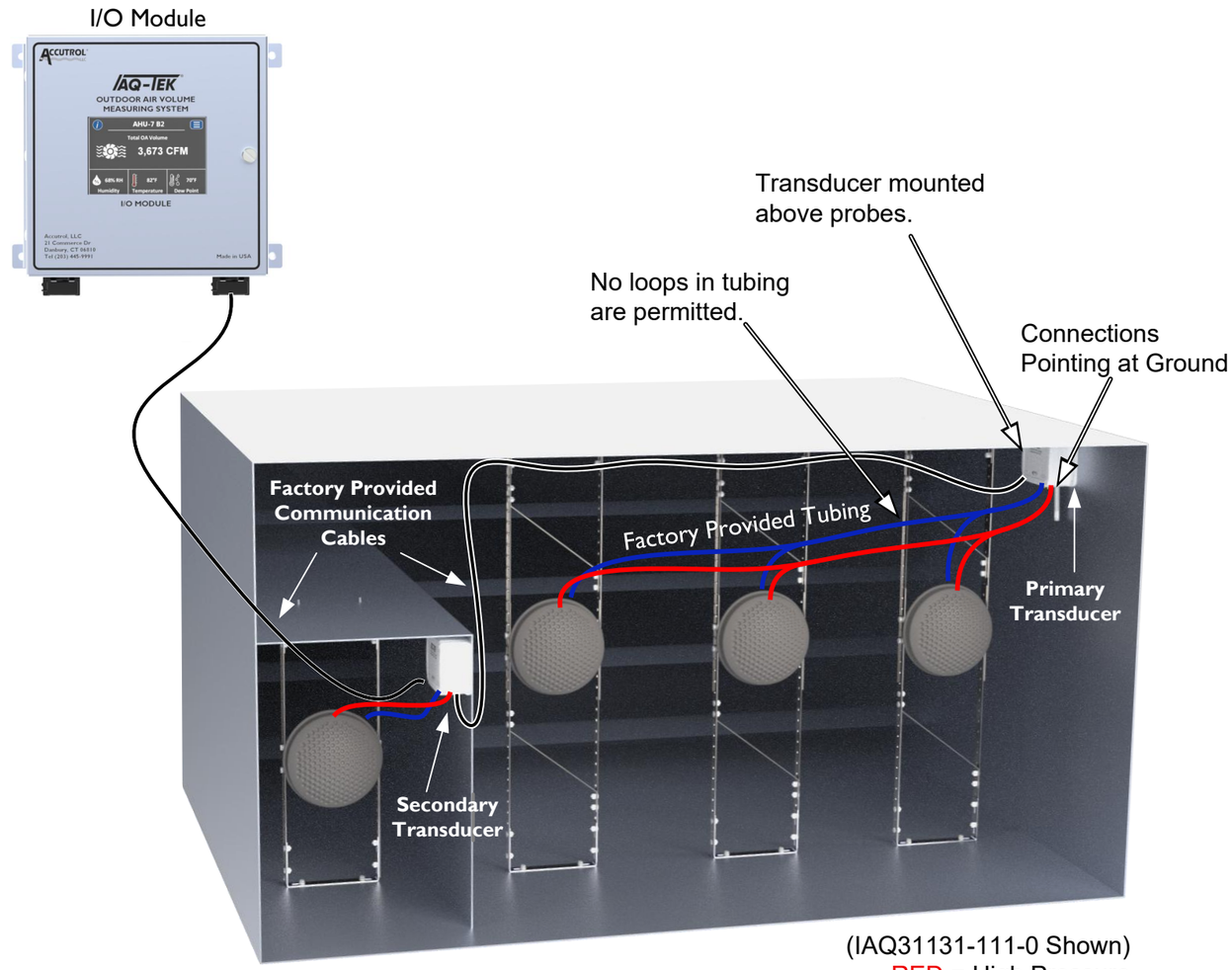

(IAQ31131-111-0 Shown)
RED = High Pressure
BLUE = Low Pressure

ACCUTROL LLC
21 Commerce Dr
Danbury, CT 06810
Tel: 203-445-9991
accutrolllc.com

Accutrol Representative:

SUBMITTAL DRAWING

IAQ-TEK®

THIS DOCUMENT IS SUBJECT TO CHANGE WITHOUT NOTICE.
THIS DOCUMENT OR THE CONTENTS THEREOF SHALL NOT BE MODIFIED WITHOUT PRIOR WRITTEN PERMISSION BY ACCUTROL LLC.

DWG. NO:	IAQ-TEK SUBMITTAL		
REVISION:	F	ECN:	3217
REV. DATE:	8-28-26	SHEET:	4 OF 5

WIRING

CAUTION: *Maintain polarity when power source is used to power multiple devices otherwise equipment may be damaged.*

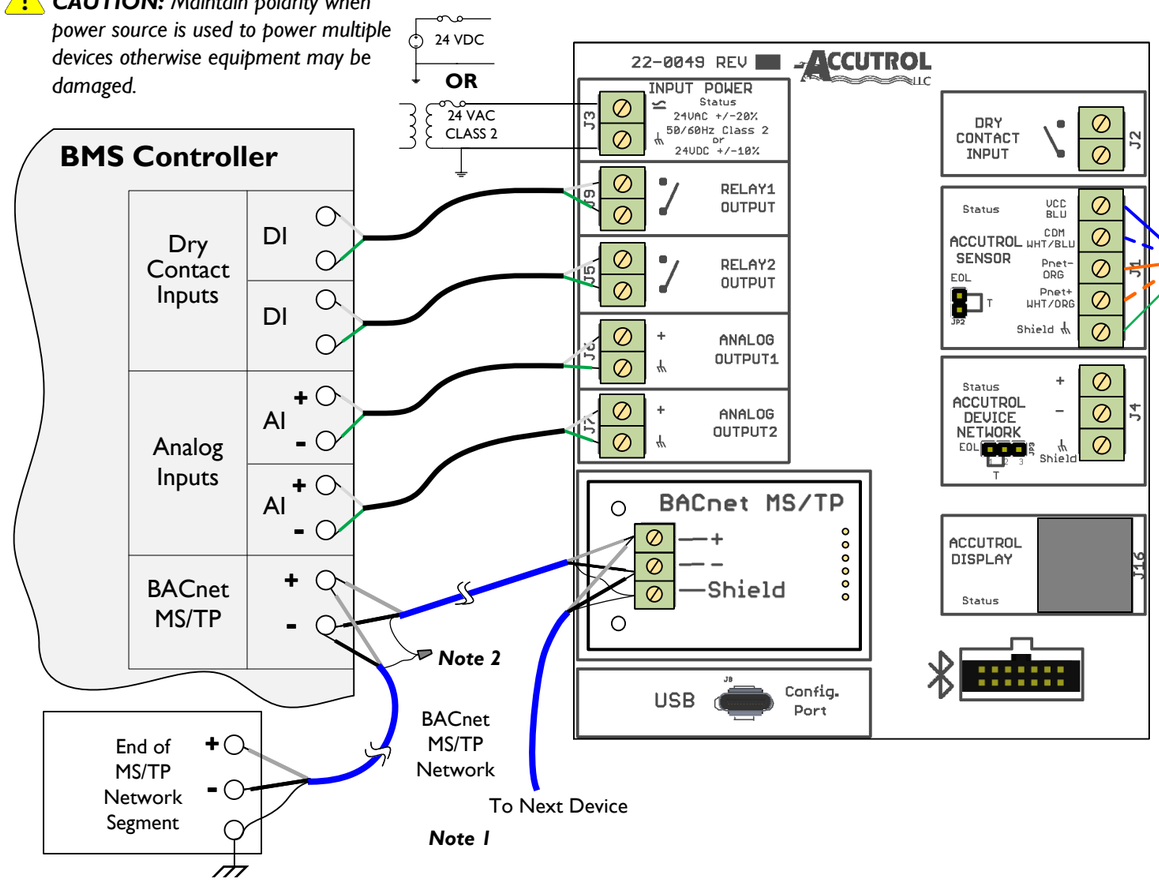

I/O Module Connection	Recommended Cable Type
BACnet MS/TP Network	Twisted-shielded-pair, low-capacitance communications cable
Relay Outputs & Dry Contact Input	Twisted-pair cable, 18-22 AWG
Analog Outputs	Twisted-shielded-pair cable, 18-22 AWG

Primary Transducer Only Installation

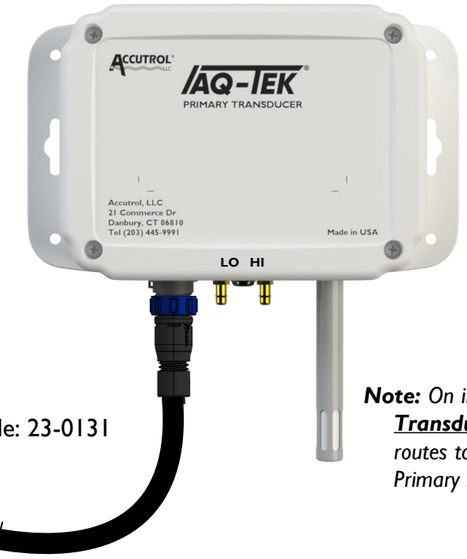

Note: *On installation with* ***only a Primary Transducer*** *the 23-0131 Cable that routes to the I/O Module attaches to the Primary Enclosure (IAQP_).*

Primary and Secondary Transducer Installation

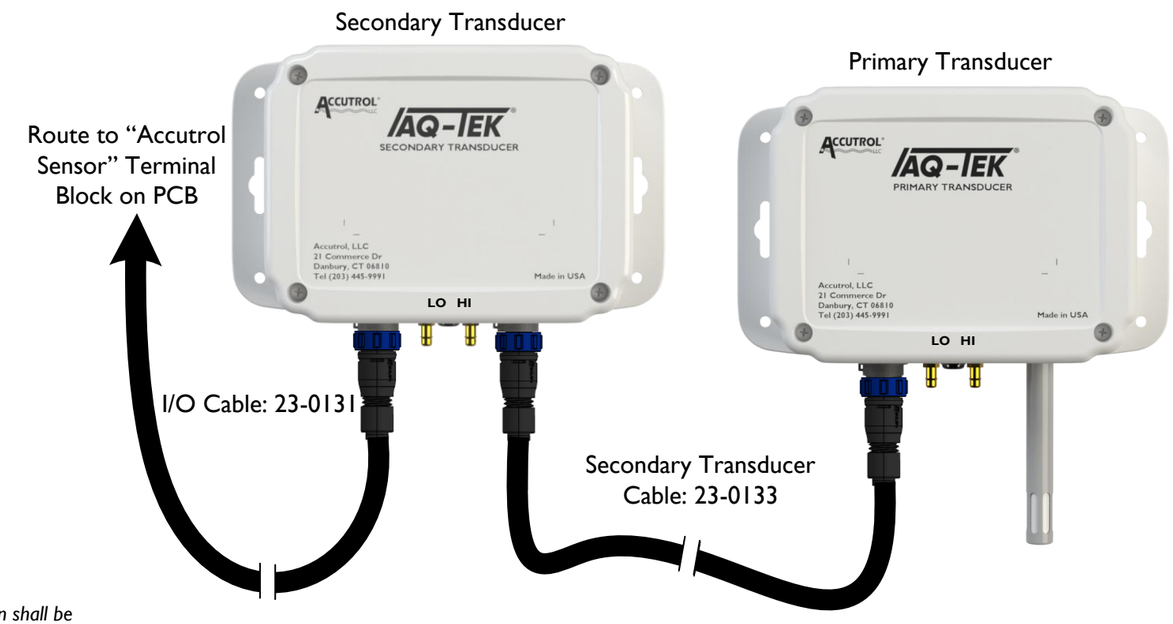

Note: *On installation with a* ***Primary and Secondary Transducer*** *the 23-0131 cable that routes to the I/O Module attaches to the Secondary transducer (IAQS_). Cable 23-0133 connects the primary to the secondary transducer.*

NOTES:

1. *BACnet network bias and end-of-line terminations are NOT provided by the IAQ-TEK BACnet MS/TP module. BACnet MS/TP bias and termination shall be provided by others.*
2. *Tie communications cable shields together and ground at single point only.*

ACCUTROL LLC
21 Commerce Dr
Danbury, CT 06810
Tel: 203-445-9991
accutrolllc.com

Accutrol Representative:

SUBMITTAL DRAWING

IAQ-TEK®

THIS DOCUMENT IS SUBJECT TO CHANGE WITHOUT NOTICE.
THIS DOCUMENT OR THE CONTENTS THEREOF SHALL NOT BE MODIFIED WITHOUT PRIOR WRITTEN PERMISSION BY ACCUTROL LLC.

DWG. NO:	IAQ-TEK SUBMITTAL		
REVISION:	F	ECN:	3217
REV. DATE:	8-28-26	SHEET:	5 OF 5